TEAR SHEET

Nye Globe Pendant
Item # KW 5131BZ

Designer: Kelly Wearstler

O/A Height: 57"
Fixture Height: 19.25"
Min. Custom Height: 31"
Width: 13"
Canopy: 4.5" Round
Finishes: AB, BZ, PN
Glass Options: CG
Lightsource: Dedicated LED
Wattage: 12w (1000lm)
Weight: 10 Pounds
Note: Custom Height Available

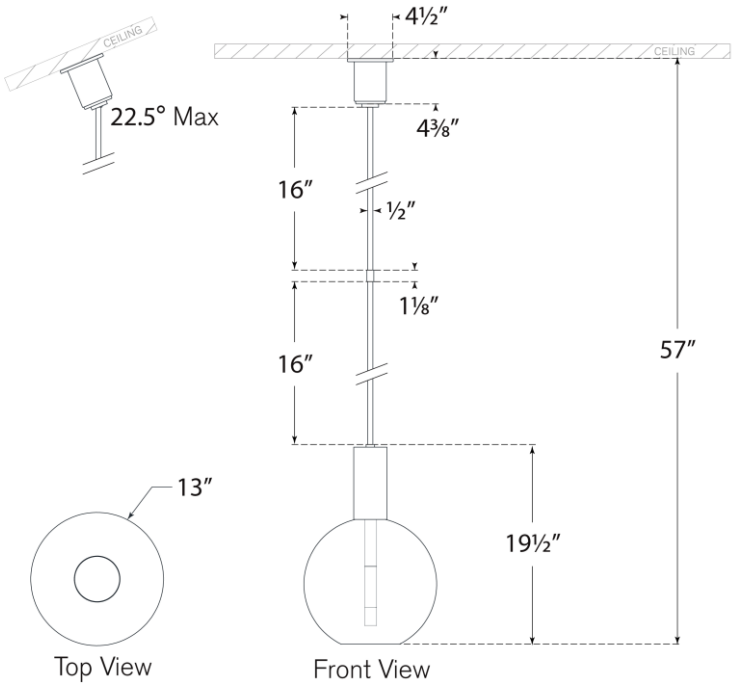

VISUAL COMFORT & CO.

DAMP LED 4