TEAR SHEET

Covet Mini Pendant
Item # KW 5110AB-ALB

Designer: Kelly Wearstler

O/A Height: 58.25"
Fixture Height: 14"
Min. Custom Height: 20.25"
Width: 2.25"
Canopy: 4.5" Square
Finishes: AB, BZ, PN
Shade Treatments: ALB
Socket: E26 Keyless
Wattage: 12 LED T10
Weight: 7 Pounds

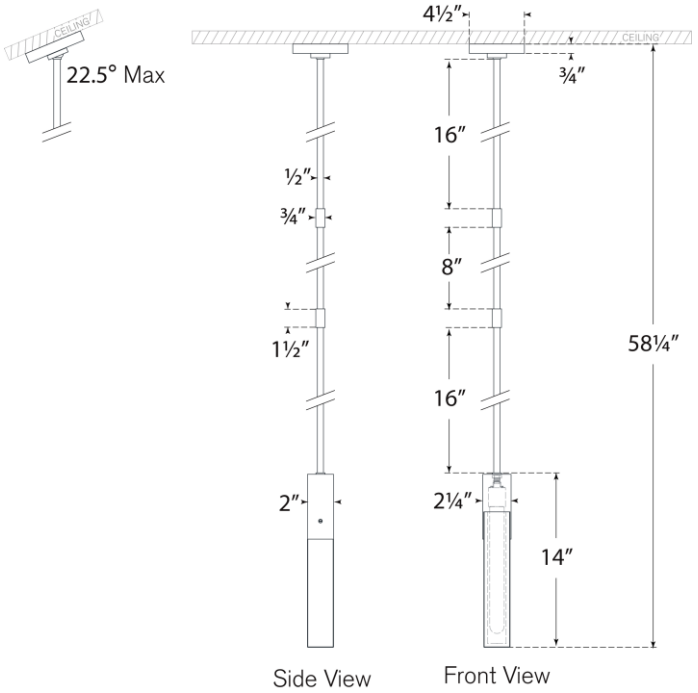

VISUAL COMFORT & CO.